Expansion Board PINOUT

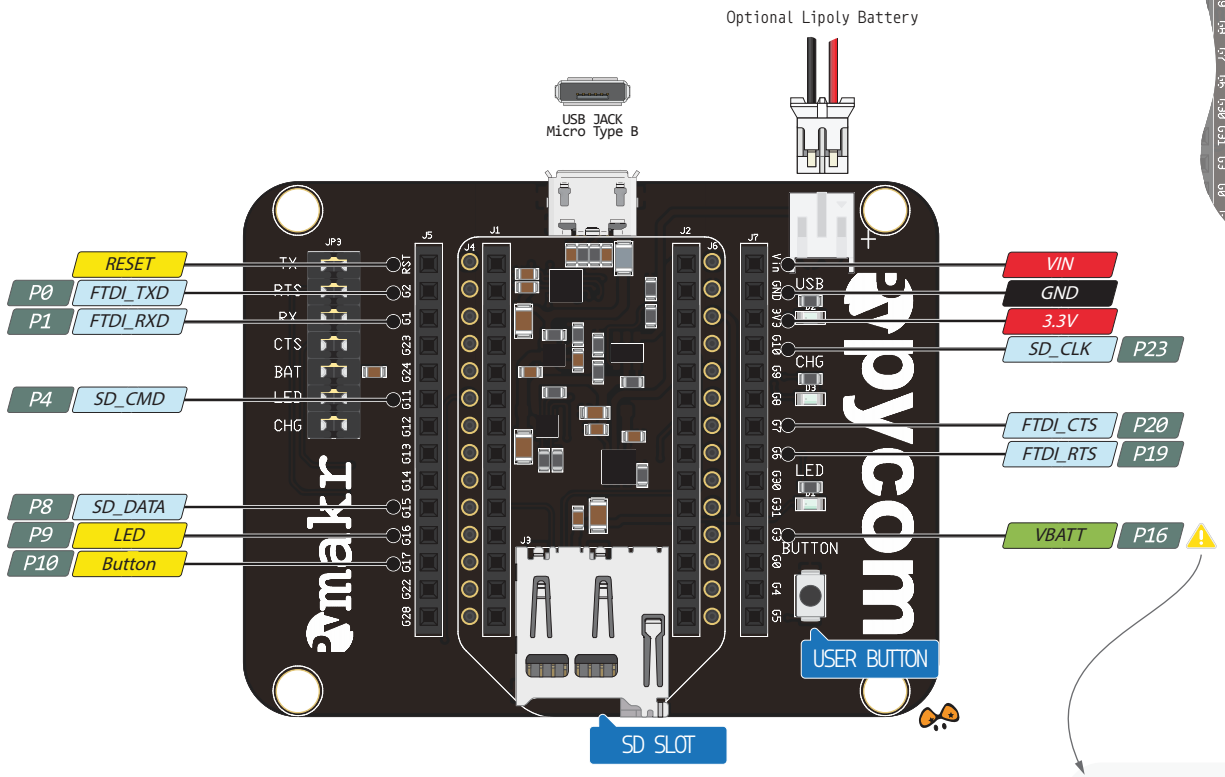

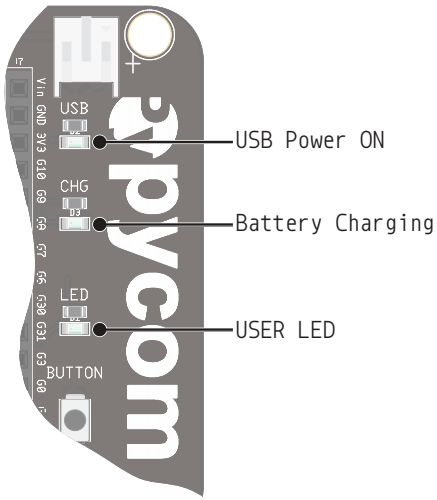

Correct board mounting

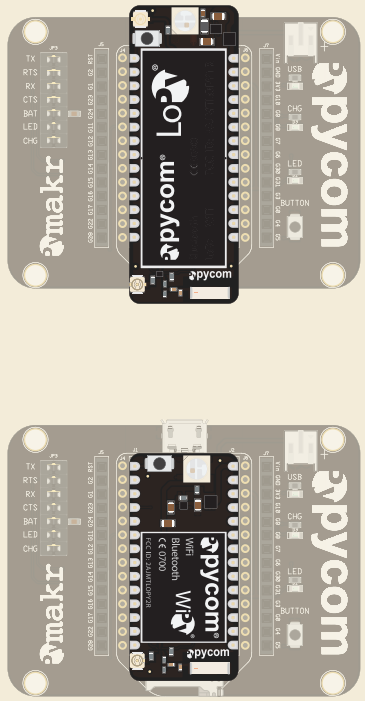

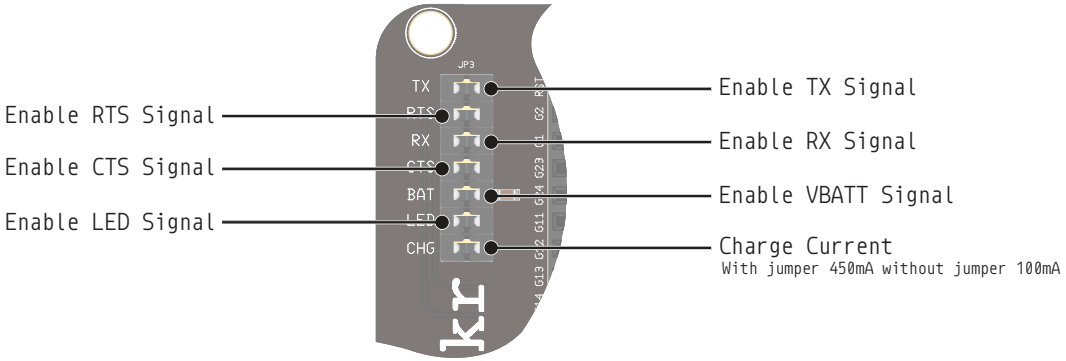

Internal Voltage Divider

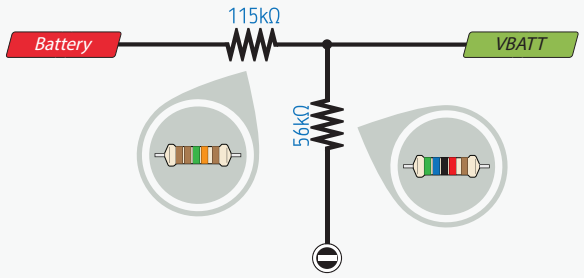

CC BY SA

05 NOV 2016
ver 1 rev 1