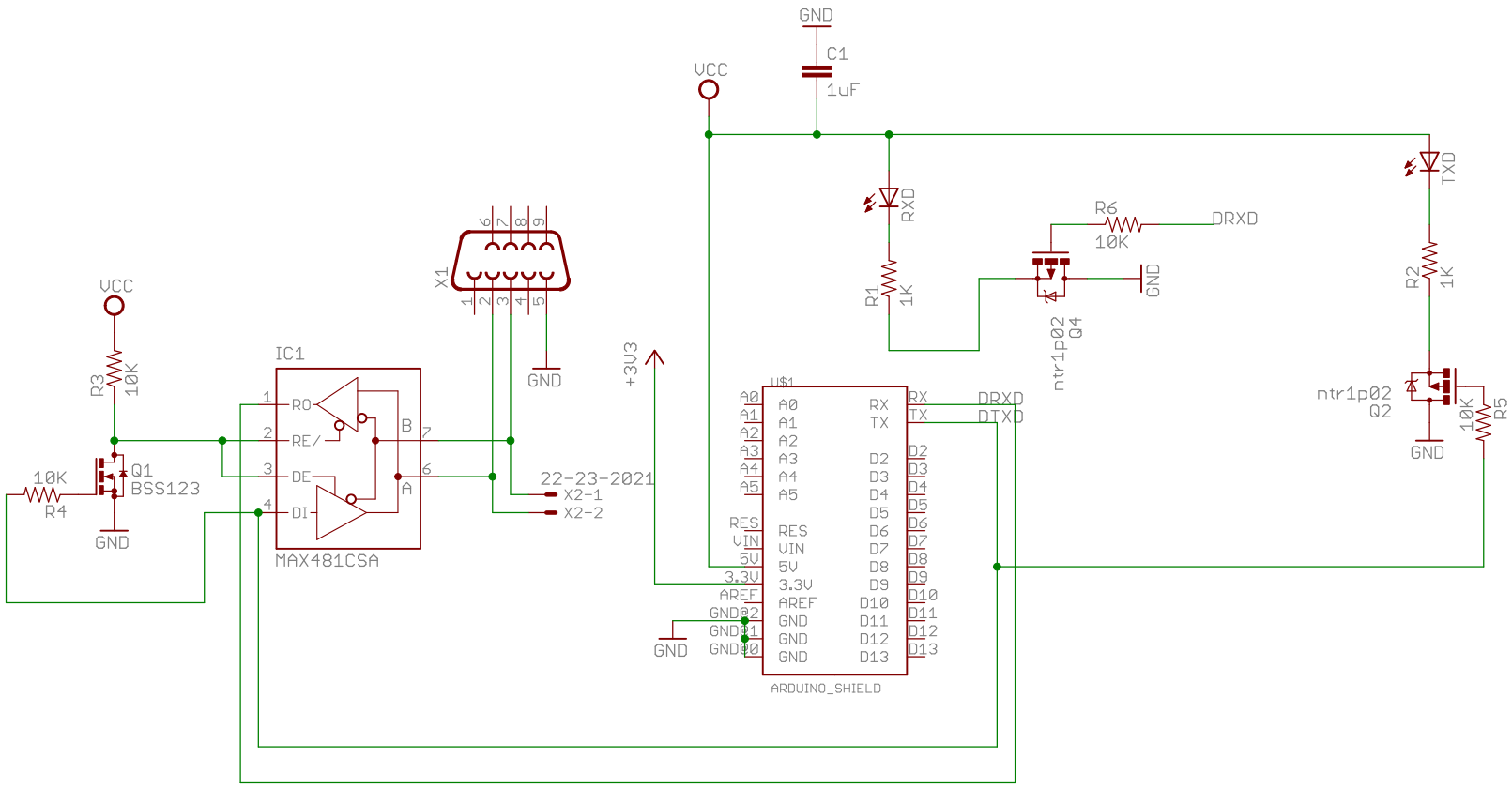

TITLE: arduino_RS485_20100818	
Document Number:	REV:
Date: 8/18/2010 10:14:52 PM	Sheet: 1/1